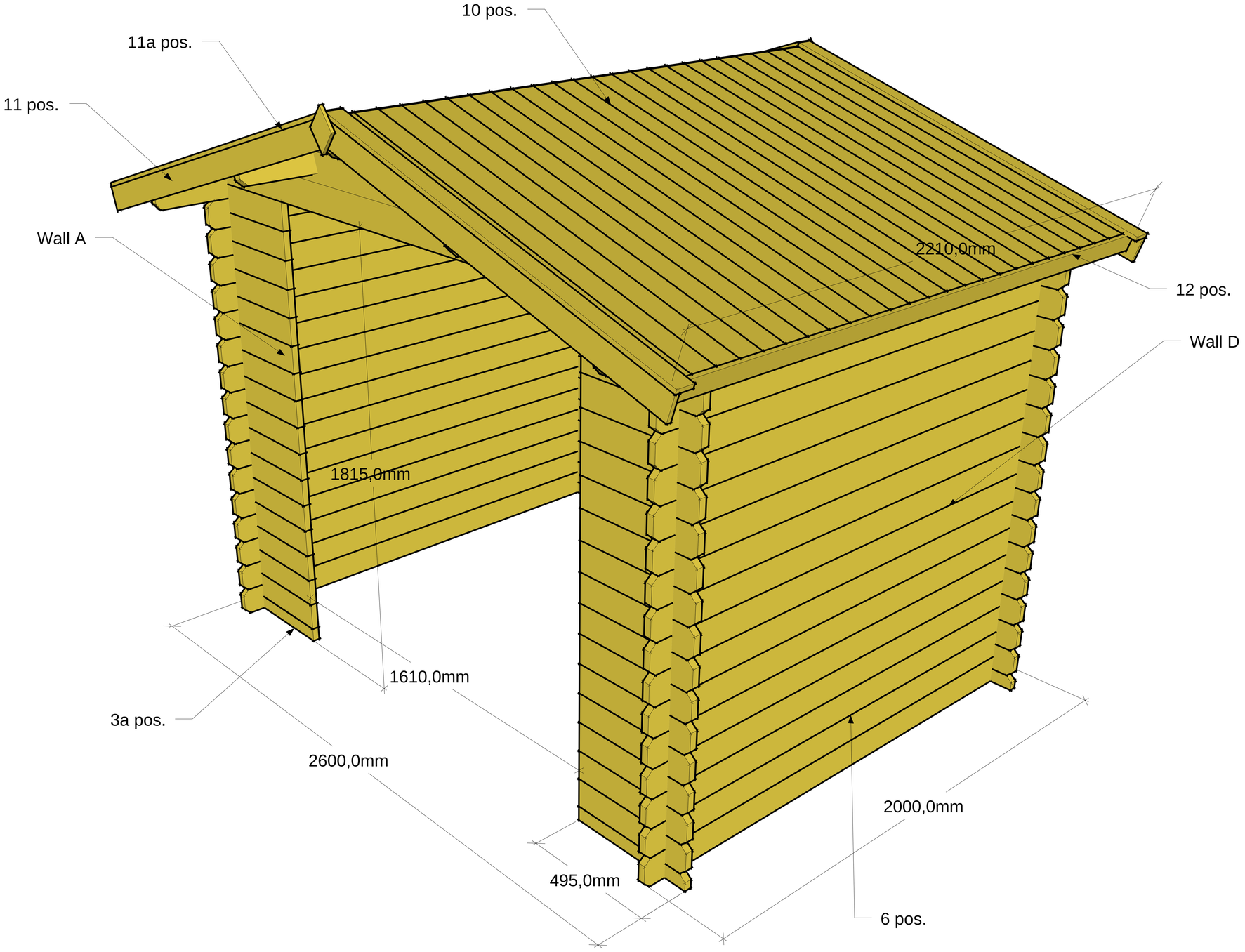
10 pos.
11a pos.
11 pos.
Wall A
2210,0mm
12 pos.
Wall D
1815,0mm
1610,0mm
3a pos.
2600,0mm
2000,0mm
495,0mm
6 pos.

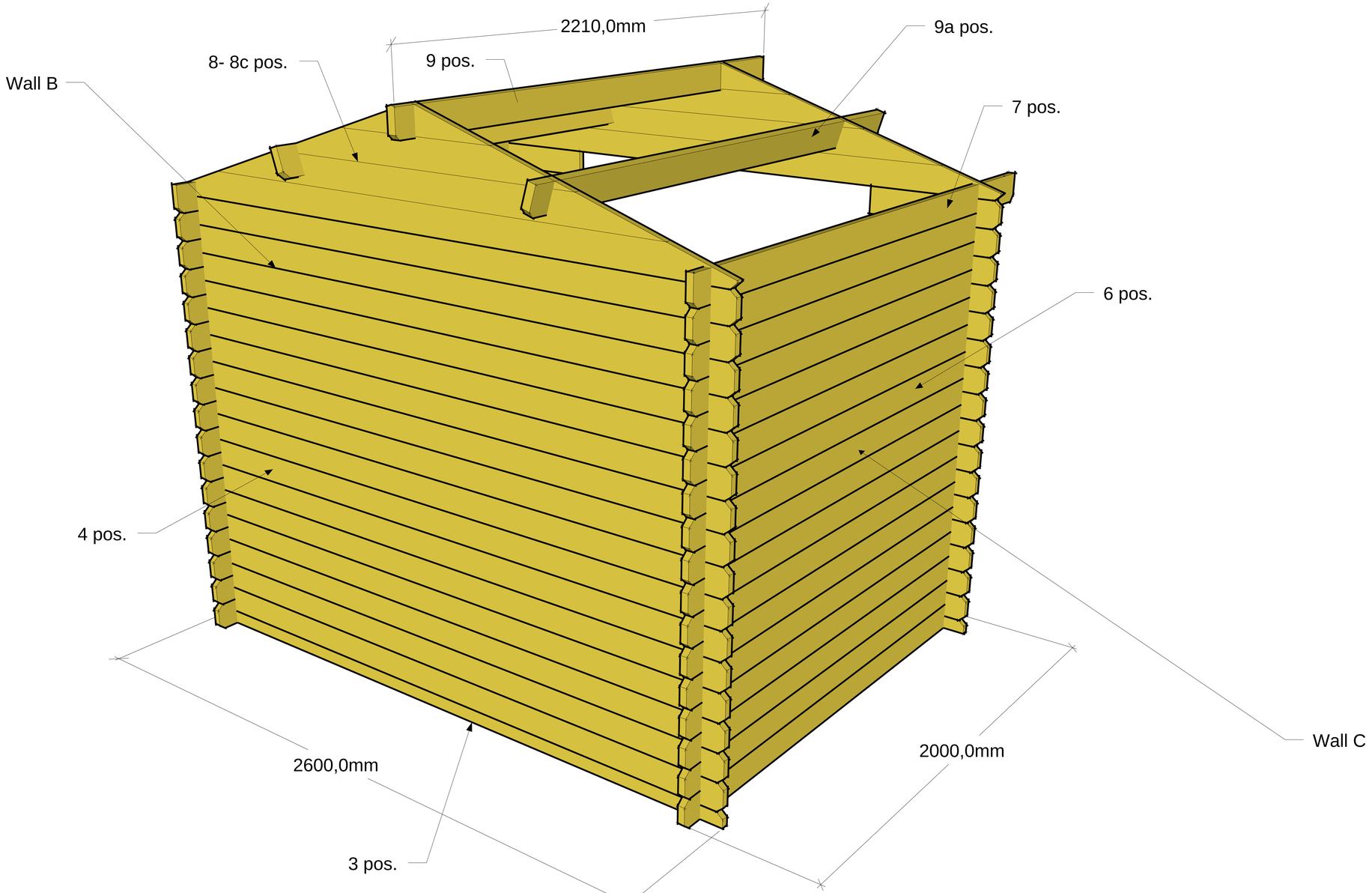
2210,0mm
9a pos.
8- 8c pos.
9 pos.
Wall B
7 pos.
6 pos.
4 pos.
Wall C
2600,0mm
2000,0mm
3 pos.

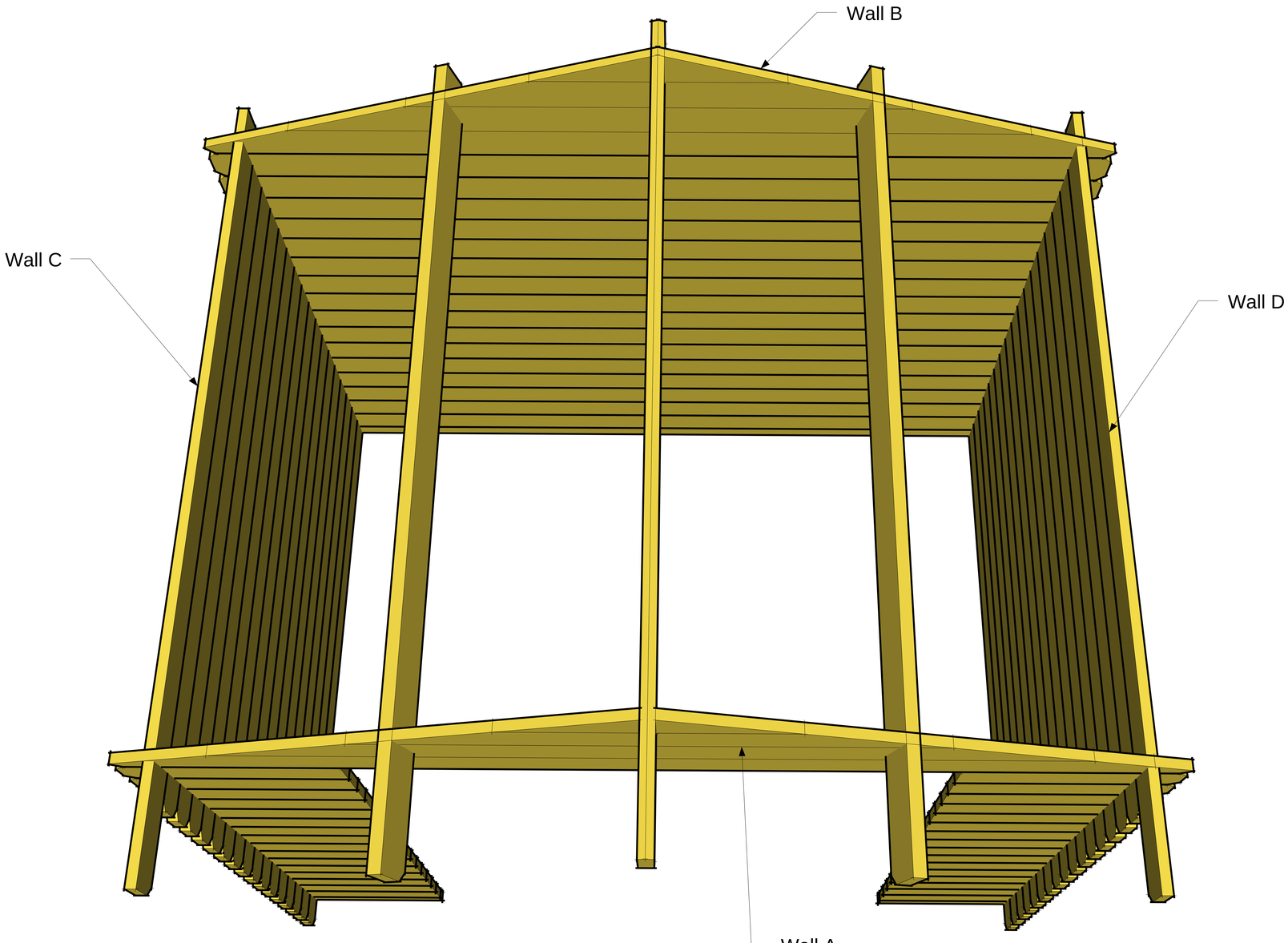
Wall B
Wall C
Wall D
Wall A

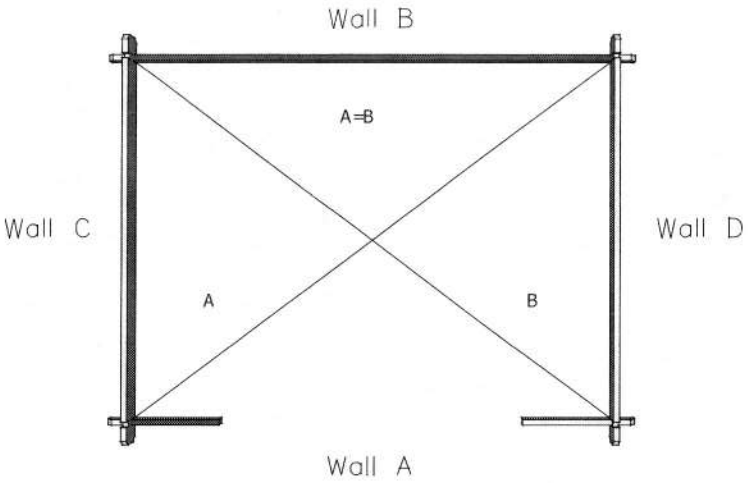
Wall B
A=B
Wall C
Wall D
A
B
Wall A

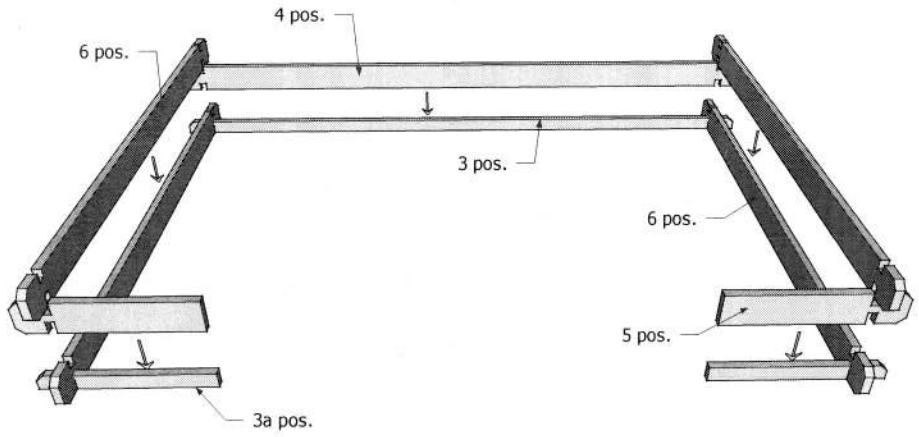
4 pos.
6 pos.
3 pos.
6 pos.
5 pos.
3a pos.

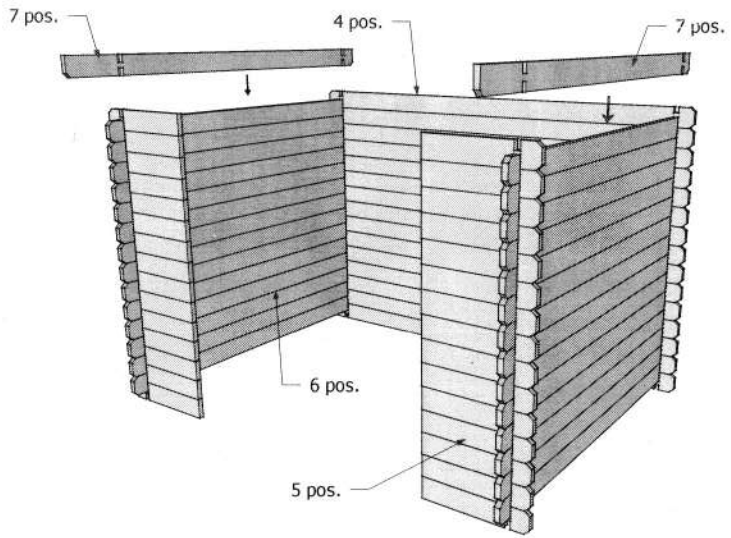
7 pos.
4 pos.
7 pos.
6 pos.
5 pos.

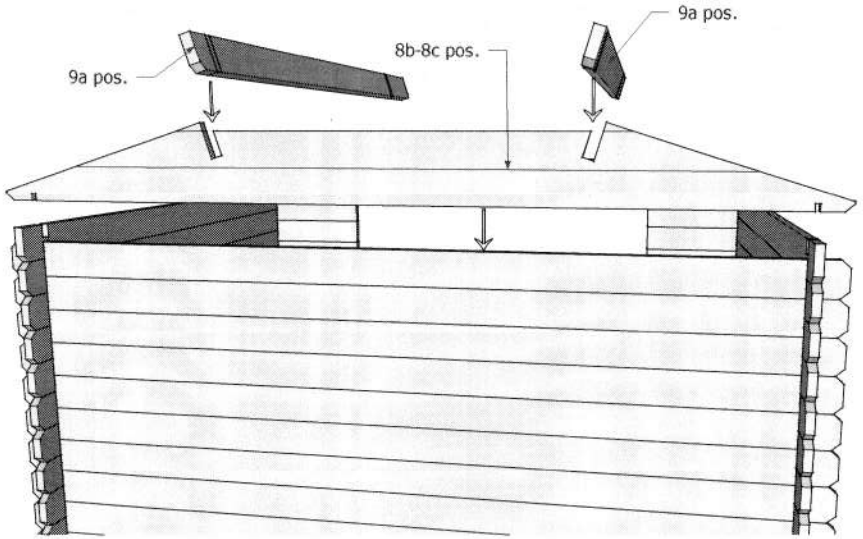
9a pos.
8b-8c pos.
9a pos.

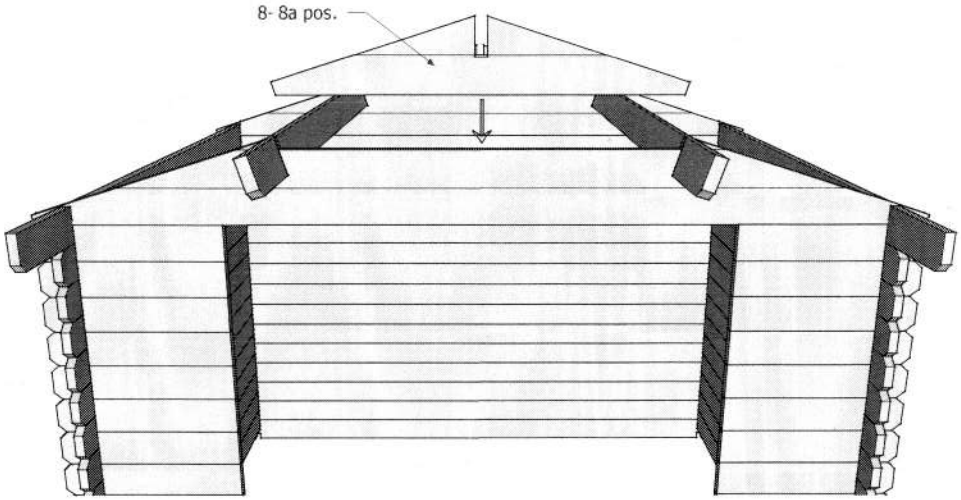
8- 8a pos.

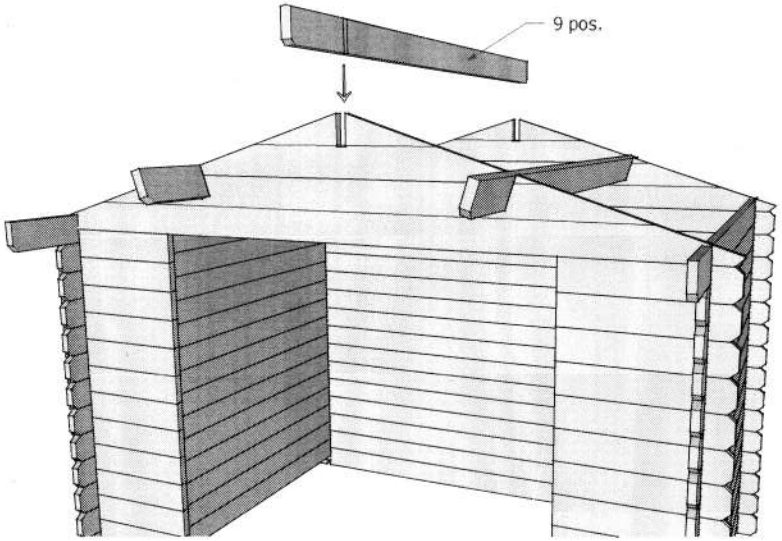
9 pos.

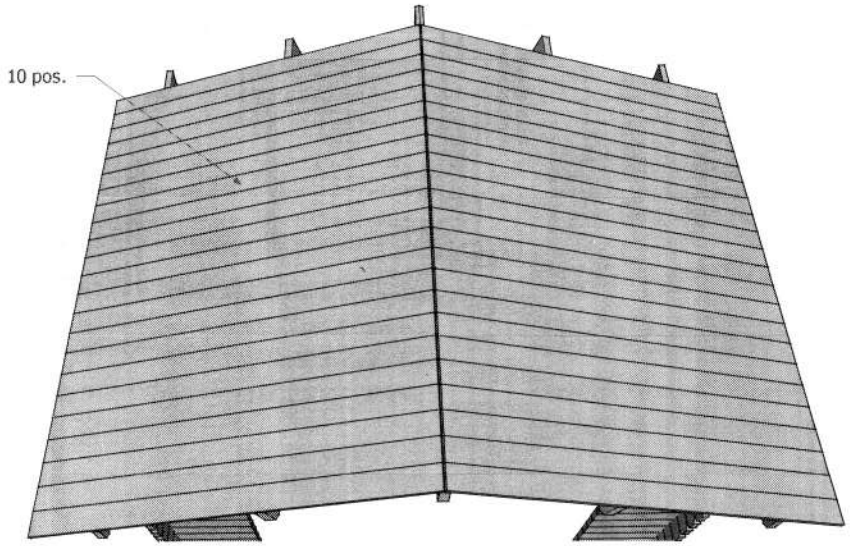
10 pos.

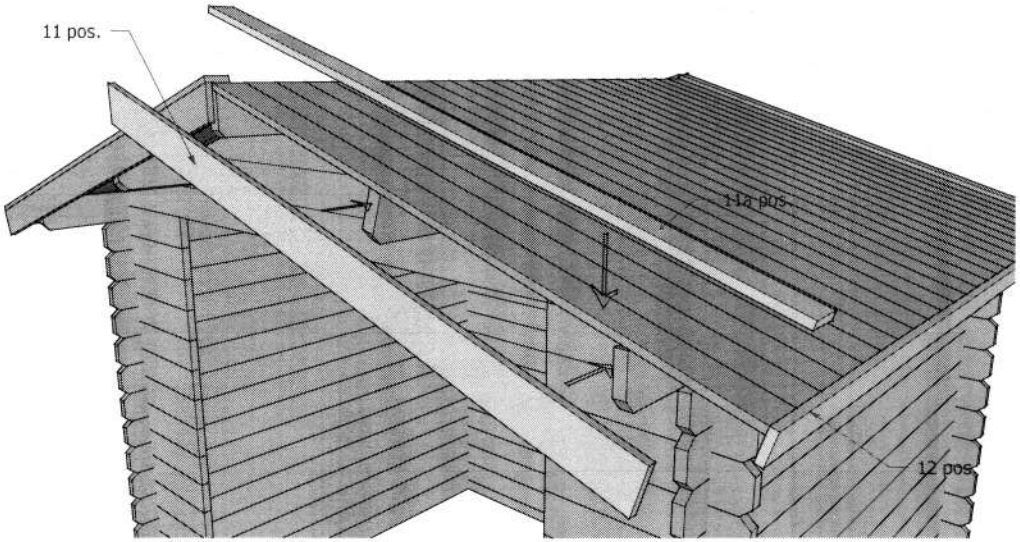
11 pos.
11a pos.
12 pos.

# Door Frame

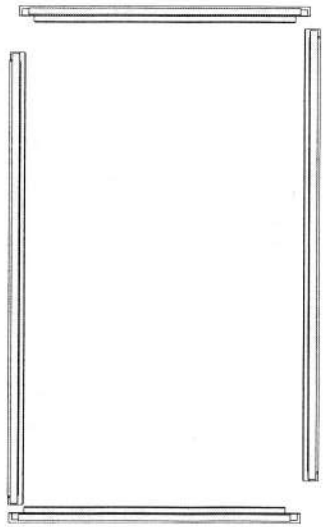

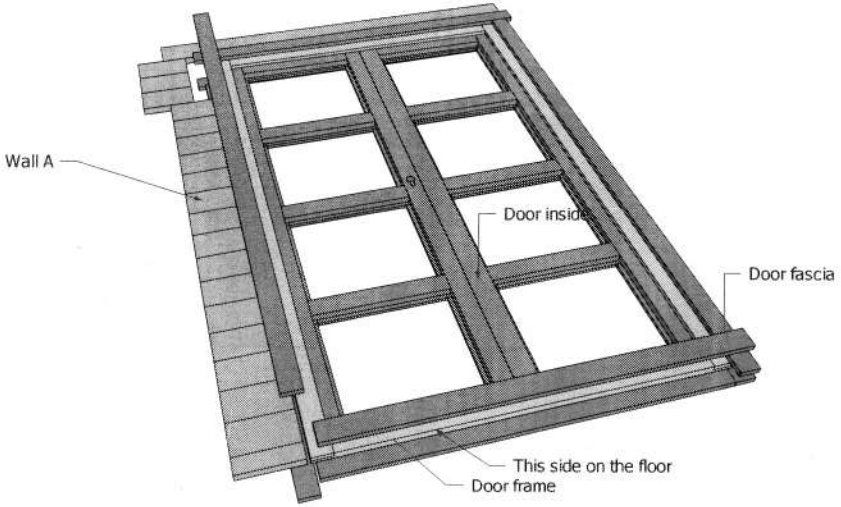
Wall A
Door inside
Door fascia
This side on the floor
Door frame

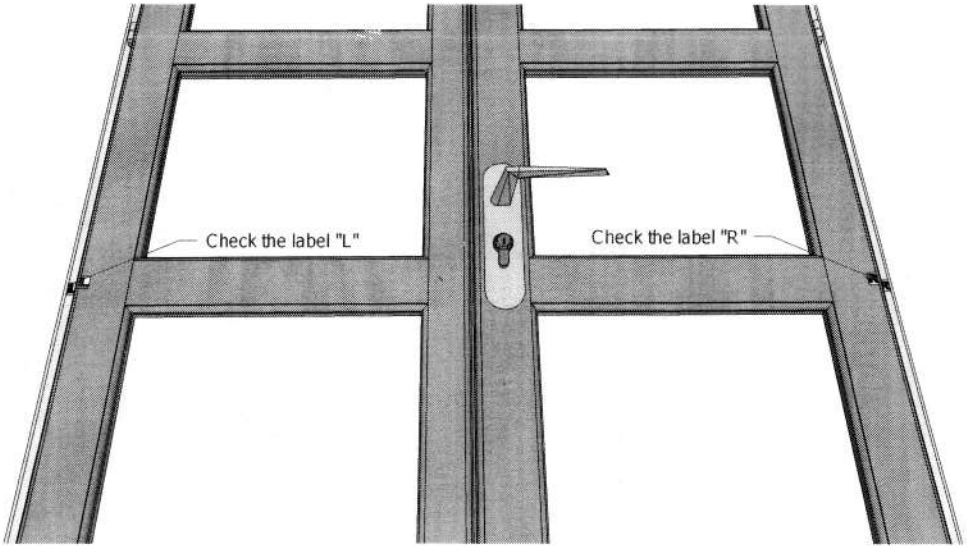
Check the label "L"
Check the label "R"

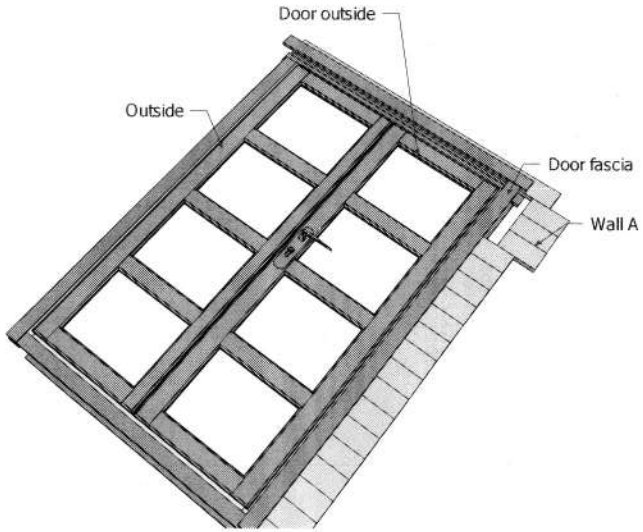
Door outside
Outside
Door fascia
Wall A

ROBERT LIST 2,6 x 2,0 28mm DD

| Pos | Size, mm h x b x l | | | Quantity | | Destination |
|---|---|---|---|---|---|---|
| 3 | 28 | 55 | 2600 | 1 | | Wall B |
| 3a. | 28 | 55 | 495 | 2 | | Wall A |
| 4 | 28 | 110 | 2600 | 16 | | Wall B |
| 5 | 28 | 110 | 495 | 32 | | Wall A |
| 6 | 28 | 110 | 2000 | 32 | | Wall C, D |
| 7 | 28 | 110 | 2110 | 2 | | Wall C, D |
| 8 | 28 | 110 | 2600 | 2 | | Vault |
| 8a | 28 | 110 | 2090 | 2 | | Vault |
| 8b | 28 | 110 | 1393 | 2 | | Vault |
| 8c | 28 | 110 | 697 | 2 | | Vault |
| 9 | 35 | 115 | 2110 | 1 | | Rafter |
| 9a | 35 | 115 | 2110 | 2 | | Rafter |
| 10 | 16 | 90 | 1495 | 48 | | Roof board |
| 11 | 16 | 90 | 1550 | 4 | | Wind board |
| 11a | 16 | 65 | 1600 | 4 | | Wind board |
| 12 | 16 | 65 | 2110 | 2 | | Roof board |
| 13 | | | | 2 | | Diamond |